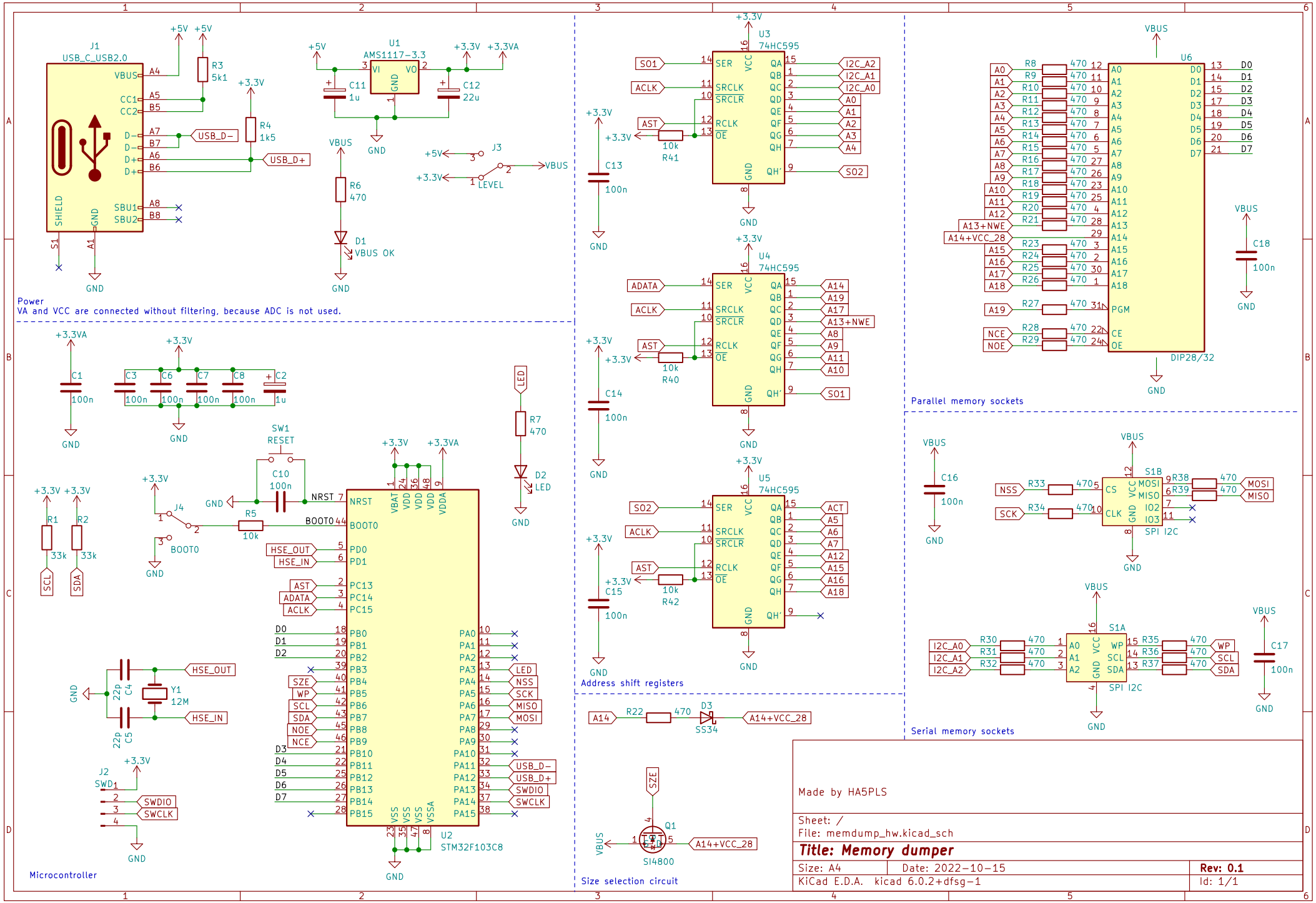

Made by HA5PLS

Sheet: /
File: memdump_hw.kicad_sch

Title: Memory dumper

Size: A4	Date: 2022-10-15	Rev: 0.1
KiCad E.D.A. kicad 6.0.2+dfsg-1		Id: 1/1