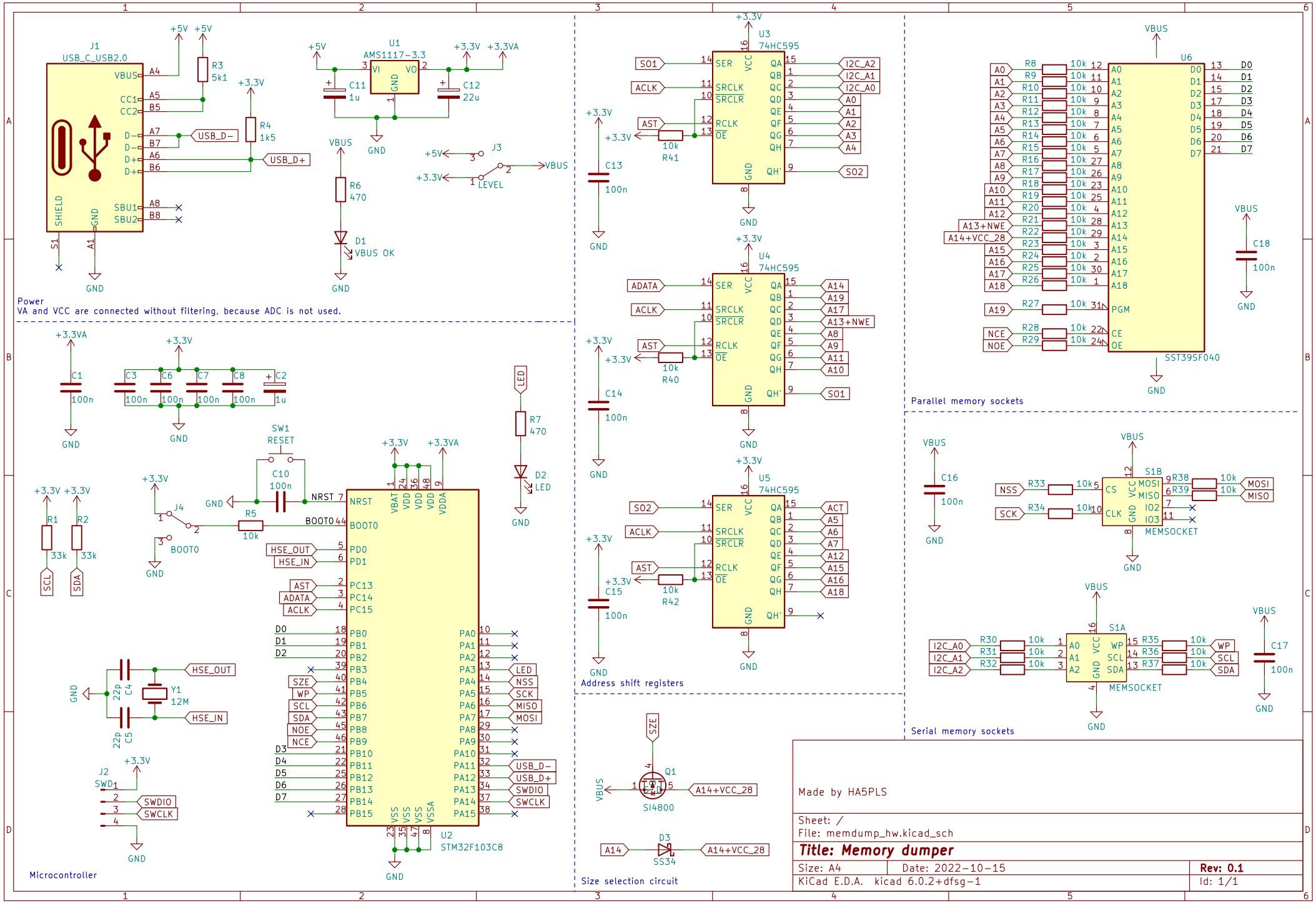
J1
USB_C_USB2.0
VBUS
CC1
CC2
D-
D-
D+
D+
SHIELD
GND
SBU1
SBU2
S1
A1
USB_D-
USB_D+
R3
5k1
R4
1k5
U1
AMS1117-3.3
VI
VO
GND
C11
1u
C12
22u
+5V
+3.3V
+3.3VA
VBUS
R6
470
D1
VBUS OK
J3
LEVEL
Power
VA and VCC are connected without filtering, because ADC is not used.
C1
100n
C2
1u
C3
C6
C7
C8
R1
33k
R2
33k
SCL
SDA
SW1
RESET
C10
100n
NRST
J4
BOOT0
R5
10k
HSE_OUT
HSE_IN
Y1
12M
C4
22p
C5
22p
J2
SWD
SWDIO
SWCLK
U2
STM32F103C8
PB0
PB1
PB2
PB3
PB4
PB5
PB6
PB7
PB8
PB9
PB10
PB11
PB12
PB13
PB14
PB15
PA0
PA1
PA2
PA3
PA4
PA5
PA6
PA7
PA8
PA9
PA10
PA11
PA12
PA13
PA14
PA15
D0
D1
D2
D3
D4
D5
D6
D7
SZE
WP
SCL
SDA
NOE
NCE
LED
NSS
SCK
MISO
MOSI
USB_D-
USB_D+
SWDIO
SWCLK
Microcontroller
R7
470
D2
LED
U3
74HC595
U4
74HC595
U5
74HC595
SER
SRCLK
SRCLR
RCLK
OE
QA
QB
QC
QD
QE
QF
QG
QH
QH'
SO1
SO2
ACLK
AST
ADATA
I2C_A2
I2C_A1
I2C_A0
A0
A1
A2
A3
A4
A13+NWE
A14+VCC_28
A15
A16
A17
A18
A19
ACT
A5
A6
A7
A12
A8
A9
A11
A10
R41
10k
R40
10k
R42
10k
C13
100n
C14
100n
C15
100n
Address shift registers
Q1
SI4800
D3
SS34
A14
A14+VCC_28
Size selection circuit
U6
SST39SF040
PGM
CE
OE
NCE
NOE
C18
100n
Parallel memory sockets
C16
100n
S1B
MEMSOCKET
NSS
SCK
MOSI
MISO
R33
R34
R38
R39
S1A
I2C_A0
I2C_A1
I2C_A2
WP
SCL
SDA
R30
R31
R32
R35
R36
R37
C17
100n
Serial memory sockets
Made by HA5PLS
Sheet: /
File: memdump_hw.kicad_sch
Title: Memory dumper
Size: A4
Date: 2022-10-15
Rev: 0.1
KiCad E.D.A. kicad 6.0.2+dfsg-1
Id: 1/1